CHAMPAGNE 87



KMC GLASS

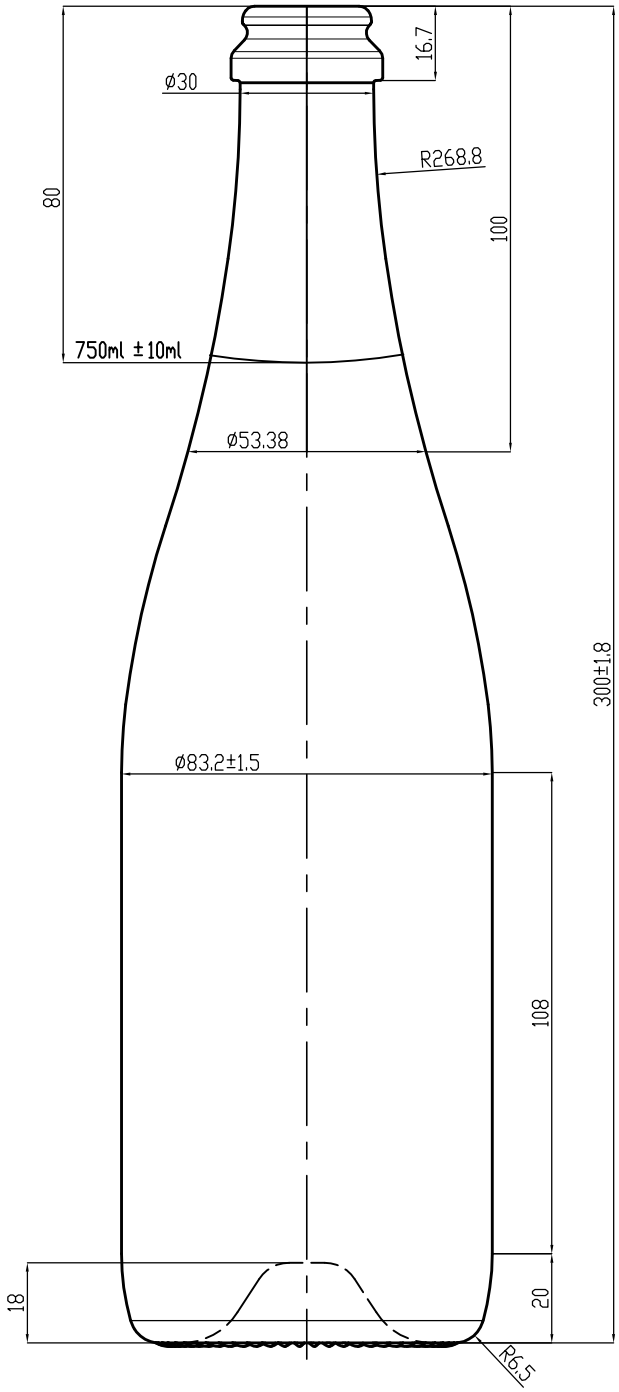

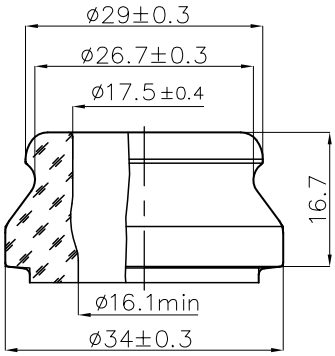

- Champagne 87
- Weight - 705 g
- Filling CAP - 750 ± 10 ml
- Color - Olive Green; Flint
- Diameter - 83.2 ± 1.5
- Entrance bore diameter - 17.5

www.kmc.glass
sales@kmc.glass

KMC GLASS